HEATSTRIP®

RADIANT OUTDOOR HEATERS

OPERATION, INSTALLATION AND MAINTENANCE MANUAL

HEATSTRIP® Classic (THH-US-A)

The heater that is a design feature!

THERMOFILM AUSTRALIA

IMPORTANT INSTRUCTIONS

When using electrical appliances, basic precautions should always be followed to reduce the risk of fire, electric shock, and injury to persons, including the following:

1. Read all instructions before installing or using this heater.

2. This heater is hot when in use . To avoid burns, do not let bare skin touch hot surfaces. Keep combustible materials, such as furniture, pillows, bedding, papers, clothes, etc. and curtains at least 3 feet (0.9mm) from the front of the heater and keep them away from sides and rear restrictions apply to location dedicated heaters only.)

3. Extreme caution is necessary when any heater is used by or near children or invalids and whenever the heater is left operating and unattended.

4. Do not operate any heater after it malfunctions. Disconnect power at service panel and have heater inspected by a reputable electrician before reusing .

5. To disconnect heater, turn controls to off, and turn off power to heater circuit at main disconnect panel (or operate internal disconnect switch if provided)

6. A heater has hot and arcing or sparking parts inside. Do not use it in areas where gasoline, paint, or flammable vapours or liquids are used or stored.

7. Use this heater only as described in this Manual. Any other use not recommended by the manufacturer may cause fire, electric shock, or injury to persons.

“SAVE THESE INSTRUCTIONS”

INSTALLATION

1. This equipment shall be installed only by qualified personal who are familiar with the construction and operation of the apparatus and hazard involved.

2. The heater is fitted with an electrical connection box and should be connected as a fixed installation by a licensed electrical professional in accordance with the relevant electrical code.

3. Within USA, electrical installation shall be made in accordance with the National Electrical code.

4. Within Canada, electrical installation shall be made according to the provisions of section 62 of the Canadian electrical code Part 1.

5. This appliance must be grounded.

6. An over current protection device (or circuit breaker) is required for proper installation. The rating of the device should be 150% of the rating of the product.

7. The heaters are designed for domestic/ commercial heating applications within indoor or outdoor area and should not be used for any other purpose. Any other use not recommended by the manufacturer may cause fire, electric shock or injury to persons.

8. Before commencing installation make sure the electrical supply voltage is the same as that shown on the rating plate of the heater.

9. The heater must be mounted at least 6 feet(1.8m) above ground level when installed in USA and 8 feet (2.4) above ground level when installed in Canada . For other clearances please refer to the diagram included in these instructions**.**

10. Do not use heater in areas where gasoline, paint or flammable liquids are used or stored.

11. The heater is not intended for use in bathrooms, laundry areas or similar indoor areas. Never locate heater where it may fall into a bathtub, pool, spa or other water container.

12. Do not operate the heater after the heater malfunctions, or has been dropped or damaged in any manner. Return heater to authorised service facility for examination or mechanical adjustment or repair.

13. There are no user serviceable parts inside the heater any servicing other then cleaning of the heater should be performed by an authorised service representative

CAUTION:

High temperature risk of fire, keep electrical cords, drapery, furnishings and other Combustibles At least 3 feet (0.9m) from front of heater and away from side and rear of heater.

Product Overview

Rev E NOV 21

Why choose HEATSTRIP® electric radiant heaters for your outdoor or hard-to-heat indoor area?

As there is typically constant air movement in an outdoor or open indoor area, many conventional patio heaters rely on convection heating which works by heating the surrounding air. This can be quite impractical for these areas, as this heated air can easily blow away with natural air movement. Radiant style heaters transfer heat directly to objects through infra-red waves.
Whilst convection heaters heat the air in between objects, radiant heaters heat the surface of the objects themselves. HEATSTRIP® electric radiant heaters are more effective within an outdoor or uninsulated indoor area because they provide targeted warmth directly to the people and objects in their path.

Discrete, stylish heating for undercover outdoor and indoor open areas

Using the radiant heating principle, HEATSTRIP® can provide effective and energy efficient comfort heating for undercover outdoor and indoor open areas. HEATSTRIP® has successfully enabled many entertainment venues such as restaurants, pubs and clubs to utilise their outdoor dining areas day and night, through all seasons. Within your workplace or business, HEATSTRIP® can provide comfort heating for designated outdoor smoking and leisure areas, as well as for workstation spot heating in factories, warehouses and showrooms. Within your home, HEATSTRIP® can provide comfort heating for undercover alfresco dining and BBQ area, patios, verandas, courtyards and balconies.

Subtle, minimalist design

The stylish, slimline black face of the HEATSTRIP® does not emit light or glow when in use, blending elegantly into your décor. Ceiling, wall and umbrella mounting options ensure that your valuable floor and table space is not wasted.

HEATSTRIP® Classic (THH models) is a premium high temperature heater and is primarily used for outdoor rooms where there is 1,2 3, or 4 enclosed sides, with an ideal mounting height of 82” to 105” (2.1 m to 2.7m.)

APPLICATION	THH
Indoor insulated areas, classrooms, offices, bathrooms, wet areas, drying rooms	√
Outdoor under cover, café, veranda, patio, balcony ceiling height 3m or less	√
Outdoor under cover, café, veranda, patio, balcony ceiling height 3m or more	X
Highly exposed outdoor area	X
Indoor open area, warehouse, factory, production areas, sports facilities	√
Indoor spot heating, above tables, assembly areas	√

Efficient, cost effective electric heating

The innovative design of the HEATSTRIP® enables comfortable and even heat dispersion from the surface with minimal operating costs.

Design flexibility

Four HEATSTRIP® models are available, ensuring the heating requirements of any undercover outdoor or open indoor area is possible. Brackets for direct ceiling or wall/ceiling angled mounting are supplied as standard. Optional HEATSTRIP® accessories include beam or fixed umbrella mount brackets, extension mount brackets, chain suspension brackets, twin mount brackets and flush mounting enclosures.

Minimal maintenance

The HEATSTRIP® incorporates no internal moving parts ensuring quiet and virtually maintenance free operation.

Australian made

Designed, engineered and assembled in Australia the HEATSTRIP® ,is fully backed by a 12 month warranty.

Stylish design— *The Heater that is a Design Feature!*

The attractive HEATSTRIP® comes with a standard black face and anodised alloy rear casing.

Easy to use

The standard HEATSTRIP® is controller by a simple on/off operation, either when plugged directly into a power point, or hard-wired via a wall mounted on/off switch. The unit takes approximately 15 minutes to heat up to maximum temperature and approximately 30 minutes to cool down, depending upon the ambient temperature. Please don't forget to turn it off. We recommend installing your HEATSTRIP® Classic with a timer controller to ensure the unit is turned off after a preset time. Thermofilm recommends Model TT-MTM controller, which includes a timer function and temperature control.

Specifications - US-A

MODEL	POWER (WATTS)	VOLTAGE (VOLTS)	CURRENT (AMPS)	DIMENSIONS (inches)	WEIGHT (lbs)
THH1500US-A	1500	120	12.2	36” x 6.5” x 2”	11
THH2400US-A (240V)	2400	240	10	53.5” x 6.5” x 2”	17.5
THH3200US-A (240V)	3200	240	13	70” x 6.5” x 2”	22
THH2400US-A (208V)	2400	208	5.3	53.5” x 6.5” x 2”	17.5
THH3200US-A (208V)	3200	208	6.4	70” x 6.5” x 2”	22
THH2400US-AW240	2400	240	10	53.5” x 6.5” x 2”	17.5
THH3200US-AW240	3200	240	13.3	70” x 6.5” x 2”	22

MODEL		
HEATER TYPE	High intensity electric radiant overhead heater with high surface area profiled alloy	
OUTPUT	Refer to model code chart above	
POWER	120, 208 or 240 Volts Nominal at 50—60 Hertz, Single Phase	
CONNECTION	Gangbox	
APPROVALS	CSA/UL E321448	
MOUNTING HEIGHT	MINIMUM RECOMMENDED MAXIMUM	82” (2.1 m) 90” to 105” (2.3 m to 2.7 m) 117” (3.0 m) For higher ceiling heights, units can be lowered using optional bracket kits or refer to the HEATSTRIP Max range
MOUNTING OPTIONS	Suitable for ceiling, wall, beam, fixed umbrella and recess mounting. Also available for extension mount using rigid fixing poles and chain mount bracket.	
PROTECTION RATING	IP55 Protection from water ingress from all directions	
COUNTRY OF MANUFACTURE	Australia	

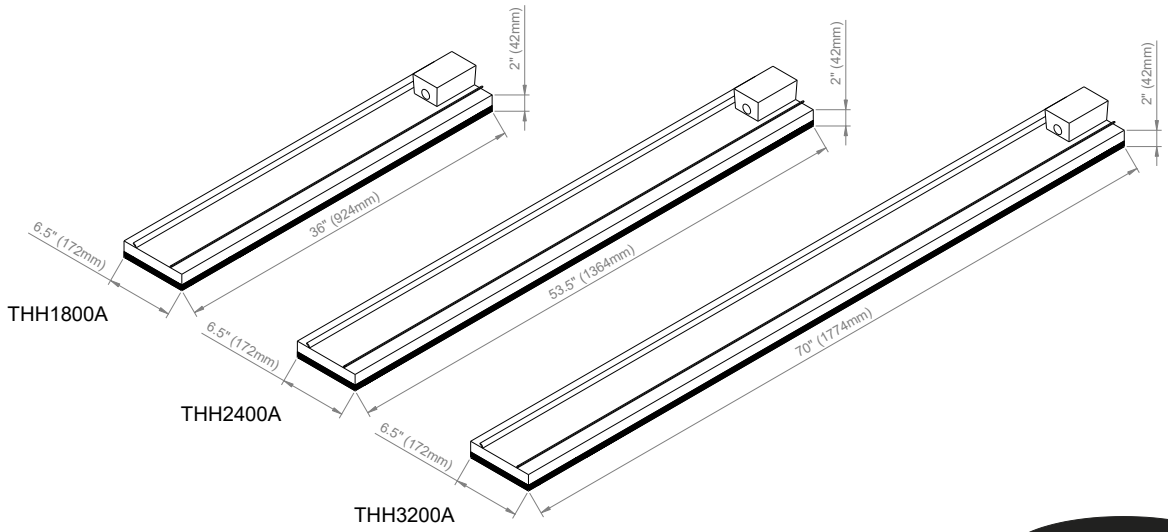

Spot heating principle

In most outdoor or difficult-to-heat indoor applications, there are 2 options when looking at the size and quantity of the heater required. Option 1 is to comfort heat the entire area based on the total dimensions of the space, regarding of whether the entire area is being fully occupied. Option 2 is to spot heat the high use areas, such as over outdoor tables, BBQ's, lounges, assembly lines or indoor workstation.
Often it is more practical and efficient to spot heat these areas. Spot heating will help to reduce the initial capital cost, as well as the running costs. Spot heating will allow the area to be "zoned", meaning heating only the areas that are being used, such as tables in a restaurant or outdoor alfresco area.

The top table shows a comparison between spot heating over a table, or heating an entire area.
The bottom table shows the flexibility of using HEATSTRIP® to provide a comfortable environment, even when the layout of the area is very unusual.

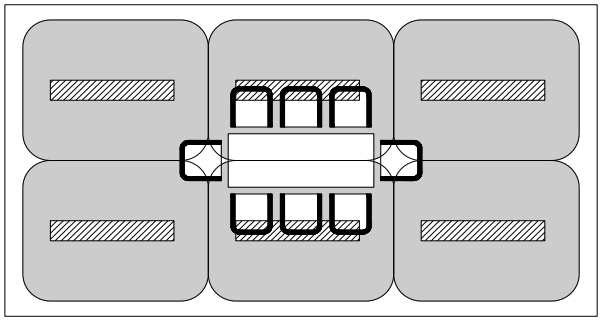

6 x THH2400

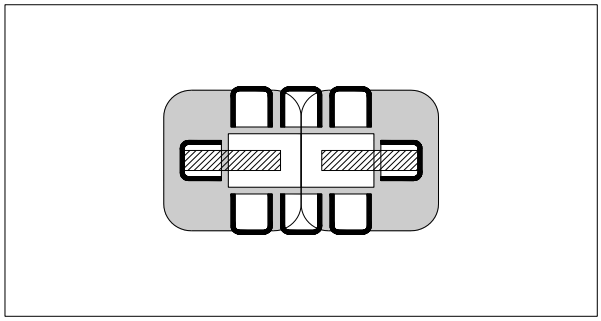

2 x THH2400

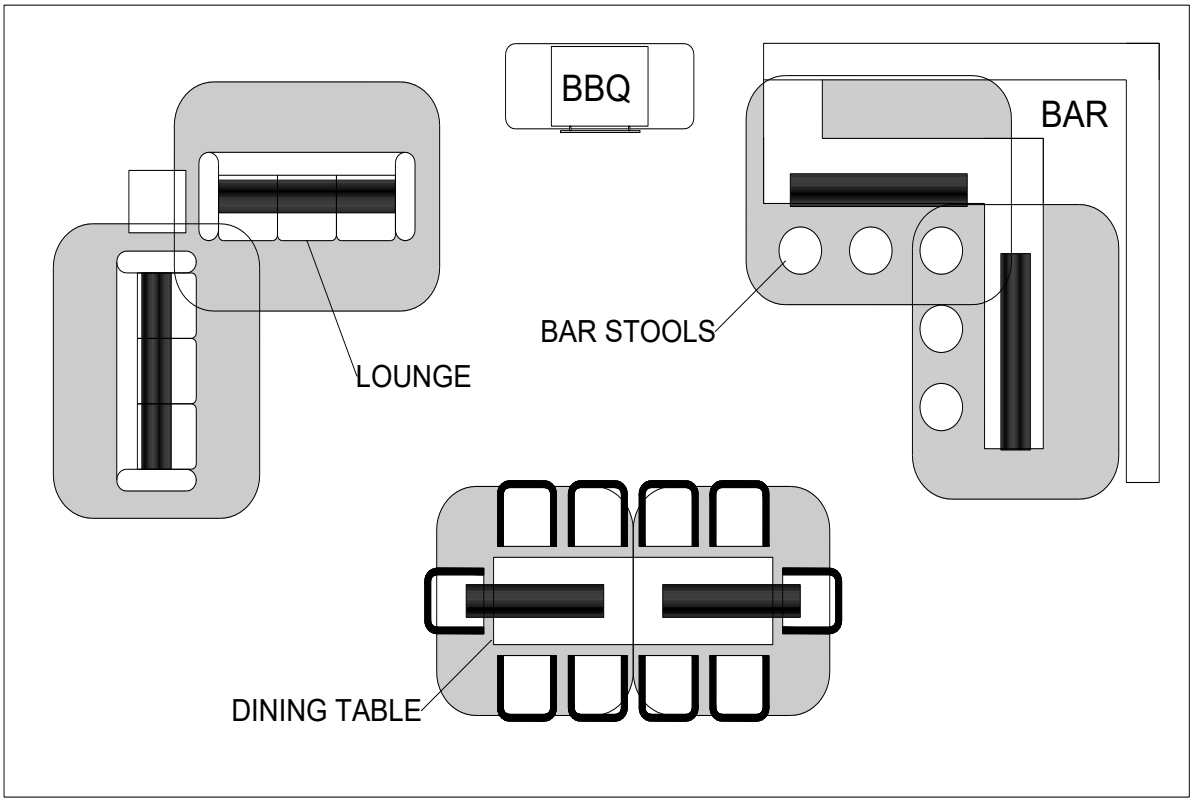

Radiant footprint

HEATSTRIP® electric heater produce radiant heat, which heats objects rather than the air. Therefore, it is imperative that objects to be heated (ie. People), are within the direct radiant footprint of the heater.

The diagram to the left shows the radiant footprint of HEATSTRIP® , and is an approximate guide based on a fully enclosed, outdoor environment.

This diagram shows that the maximum heat output is found directly under the heater, and the temperature decreases as you move away from the heater.
It highlights the importance of maintaining recommended mounting heights, and positioning the heater directly above the area to be heated, if possible.

Also, the temperature (ie. surface temperature) is the same for all 4 models, regardless of the wattage. However, the size increases and the length of the unit increases, the radiant footprint will be larger.

The below diagrams show the approximate heating area for each model, based on both an indoor and outdoor enclosed environment.

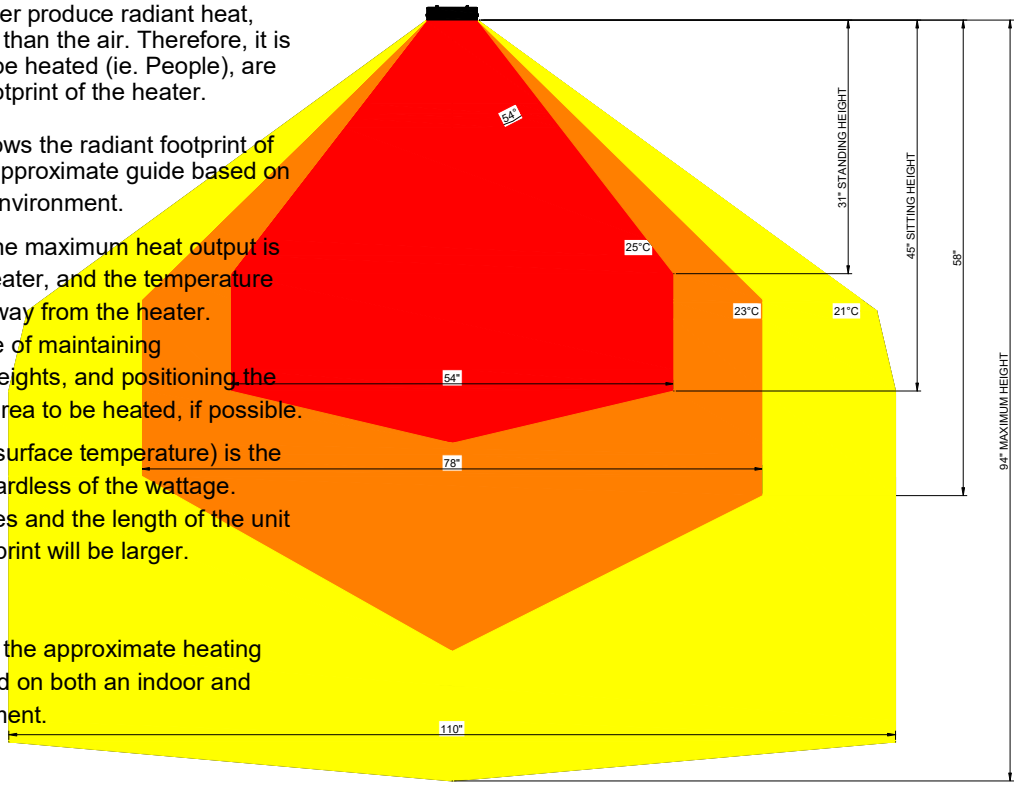

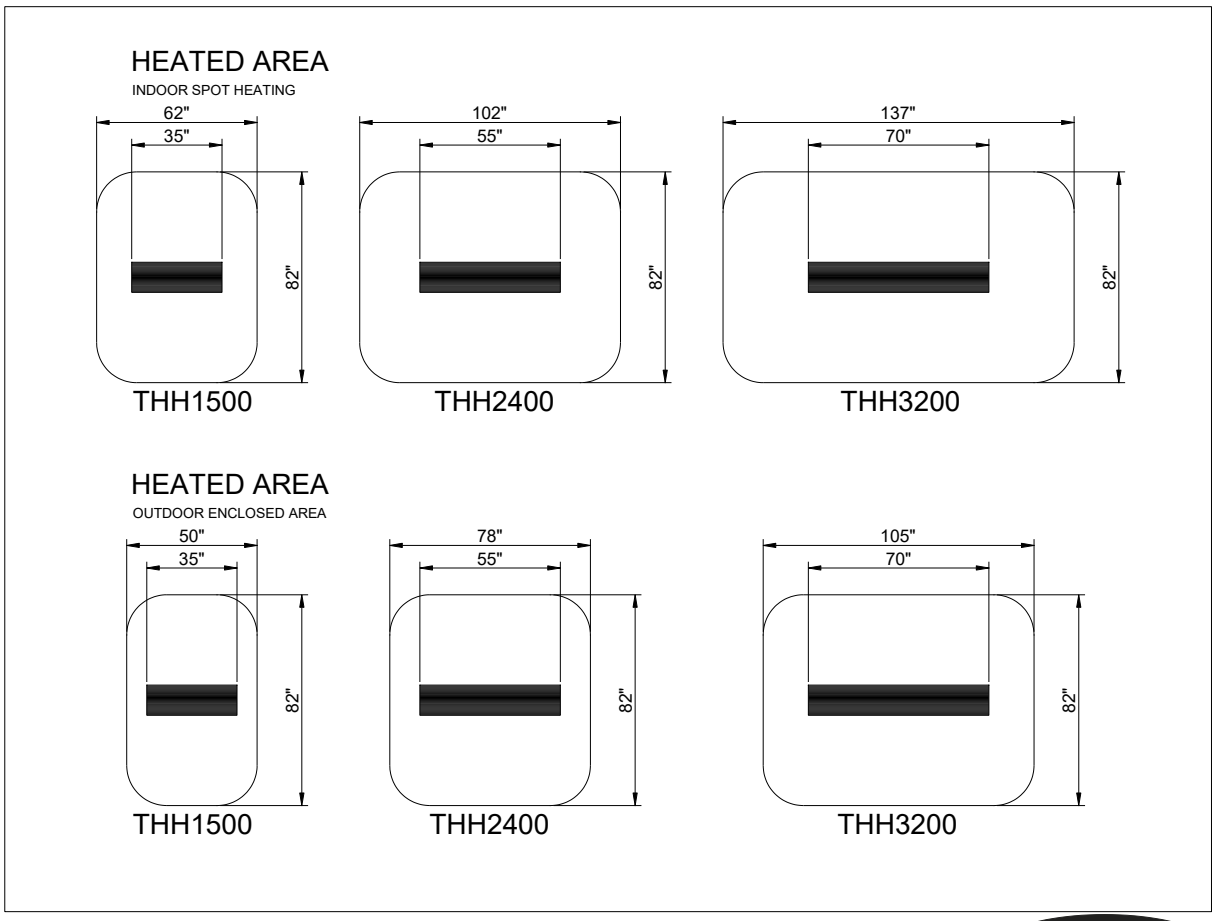

Selection guide

Prior to selecting the exact model and quantity required for your application, please ensure the correct range of Heatstrip heaters is being used.

Below is an overview of the Heatstrip options.

HEATSTRIP® Classic (THH models) is a premium high temperature heater and is primarily used for outdoor rooms where there is 1,2 3 or 4 enclosed sides, with an ideal mounting height of 82" to 105" (2.1 m to 2.7m.) Ideal for hard to heat indoor applications or moist environments where an IP55 rating is required.

General recommendations for **HEATSTRIP® Classic:**

- Ideal mounting height: 82" to 105" (2.1 m to 2.7m.) Maximum is 117" (3m) in a protected outdoor environment.
- Ideal mounting location: ceiling mounted, directly above area to be heated (eg. above a table)
- Based on the radiant footprint of the previous page, for a protected outdoor area, a minimum of 500W/m2 is required. For indoor spot heating, a minimum heating capacity of 400W/m2 is recommended.

The below table outlines the coverage of each **HEATSTRIP® Classic** model (in m2), based on 3 different scenarios. For example, for all outdoor area that is protected from prevailing winds by walls, café blinds etc, Model THH1500US-A will cover 32 ft2 and Model THH2400US-A will cover 52 ft2.

MODEL	INDOOR PROTECTED (ft2)	OUTDOOR ENCLOSED (ft2)	OUTDOOR EXPOSED (ft2)
THH1500US-A	40	32	26
THH2400US-A	65	52	43
THH3200US-A	86	69	57
THH2400US-AW240	65	52	43
THH3200US-AW240	86	69	57

Table layout

For the majority of outdoor applications, the most effective method is to spot heat a table or similar area. The below diagrams provides an easy selection guide for the approximate model and quantity of heaters required to heat common residential table settings.

Selections are based on HEATSTRIP® Classic being mounted at 94” (2.4m) from the floor and an undercover fully enclosed outdoor area.

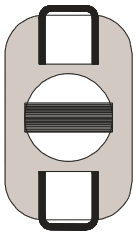

THH1500

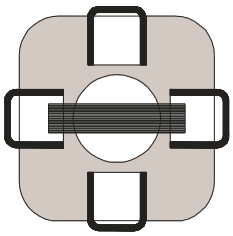

THH2400

THH2400

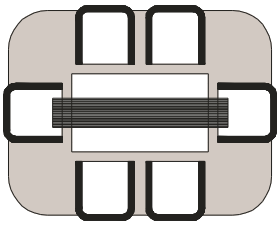

THH3200

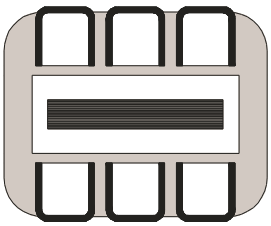

THH3200

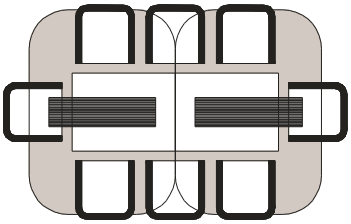

2 x THH1800

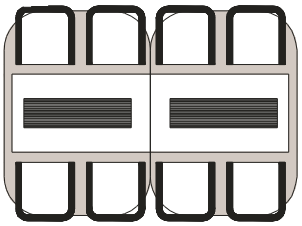

2 x THH1800

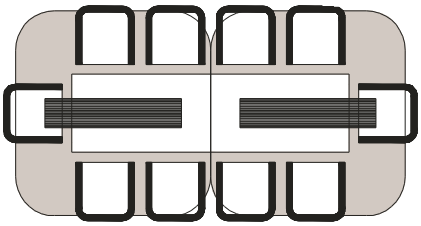

2 x THH2400

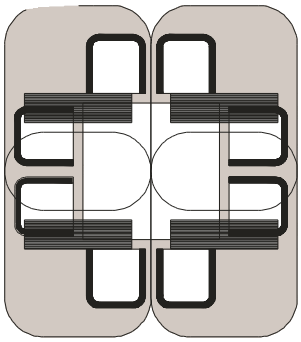

4 x THH1800

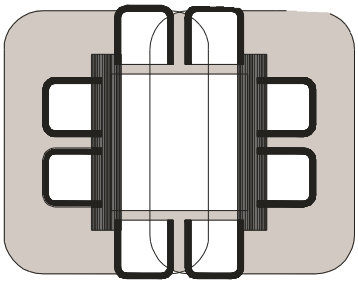

2 x THH3200

Installation Requirements

The ideal mounting position for the HEATSTRIP®. Classic is on the ceiling, directly above the area to be heated. If this is not possible, HEATSTRIP®. can be mounted on a wall and angled downwards. In this situation, ensure the mounting height is in the range of 82" to 105" (2.1 m to 2.7m)and the table is within 98" (2.5m) of the wall.

For mounting heights more than 117" (3m,) we recommend the use of the optional accessories to reduce the height of the heater to 82" to 105" (2.1 m to 2.7m.) This will increase the effectiveness of your HEATSTRIP®. Refer to the Mounting Accesory section for more information.
Electrical connections/GPO's should not be located at the back of the heater. They should be located outside the physical footprint of the units to minimize heat build-up behind the units.
If the heater is to be mounted on an incline (eg. Vaulted ceiling), ensure the electrical connection is located at the lowest point of the heater.

The heater should be installed no closer than 12" (300mm) from the end or side of the heater to adjacent walls or objects.

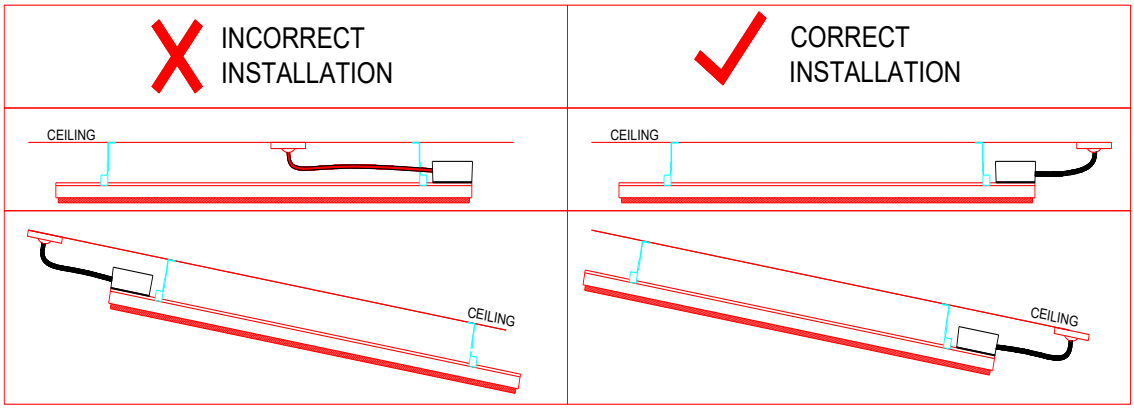

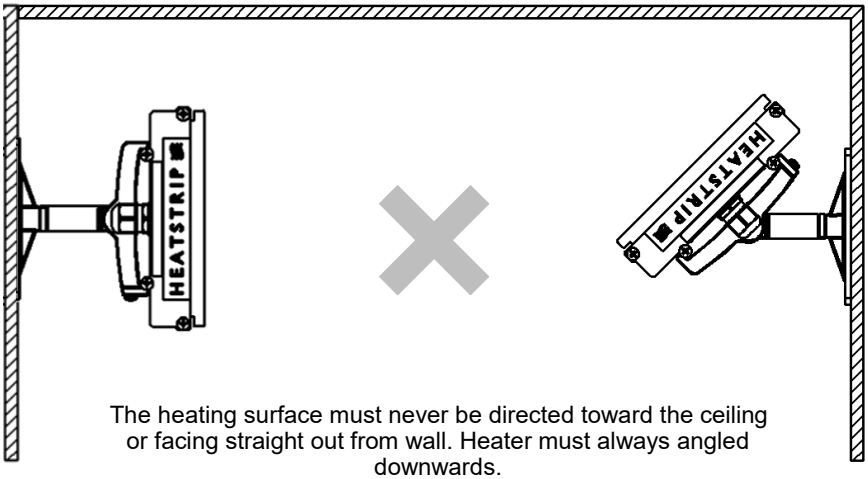

The heating surface must never be directed toward the ceiling or facing straight out from wall. Heater must always angled downwards.

Installation location —the below diagrams confirm the minimum recommended clearances.

WARNING: This heater is not equipped with a device to control the room temperature. Do not use this heater in small rooms when they are occupied by persons not capable of leaving the room on their own, unless constant supervision is provided.

Angled Wall Installation

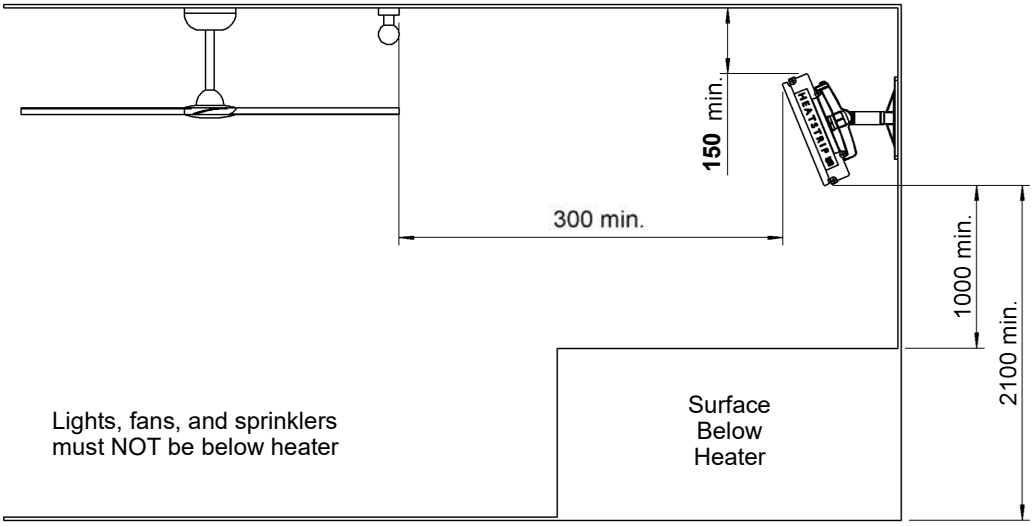

Ceiling Installation

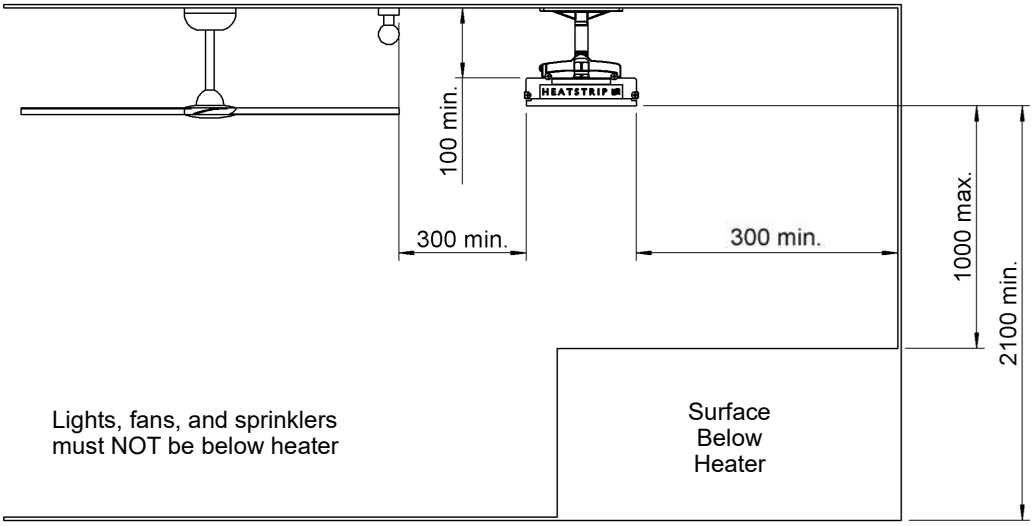

Angled Ceiling Installation

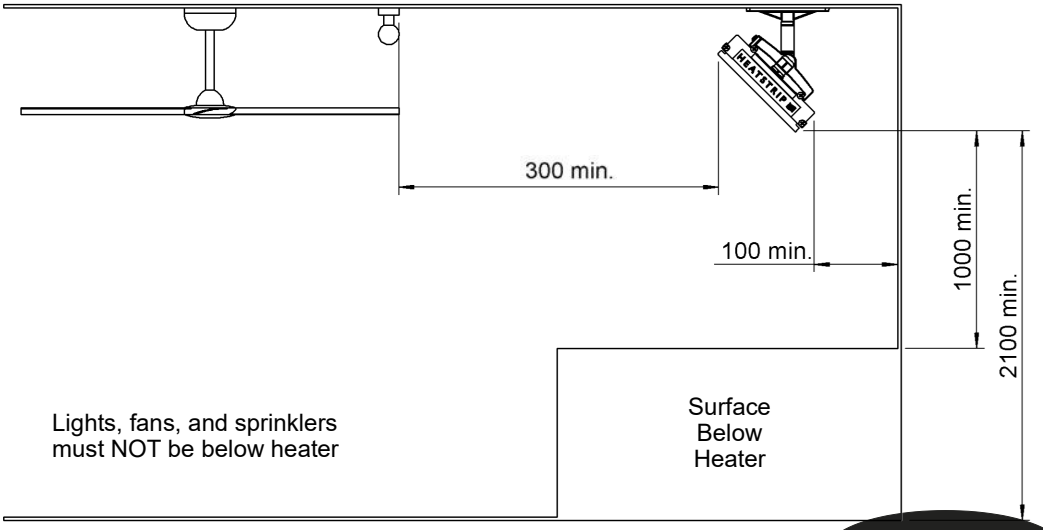

THERMOFILM AUSTRALIA

Mounting options

The installation of HEATSTRIP® Classic is simple and easy with the standard mounting brackets supplied. For other more challenging locations there are a range of mounting options available - refer to below diagrams.

The HEATSTRIP® Classic can be mounted directly to the ceiling, angled downwards on a wall, fitted flush with the ceiling; suspended on chains or poles; attached to beams or poles; mounted end-to-end, or 2 units together. Refer to the following pages for more detailed information on each mounting option.

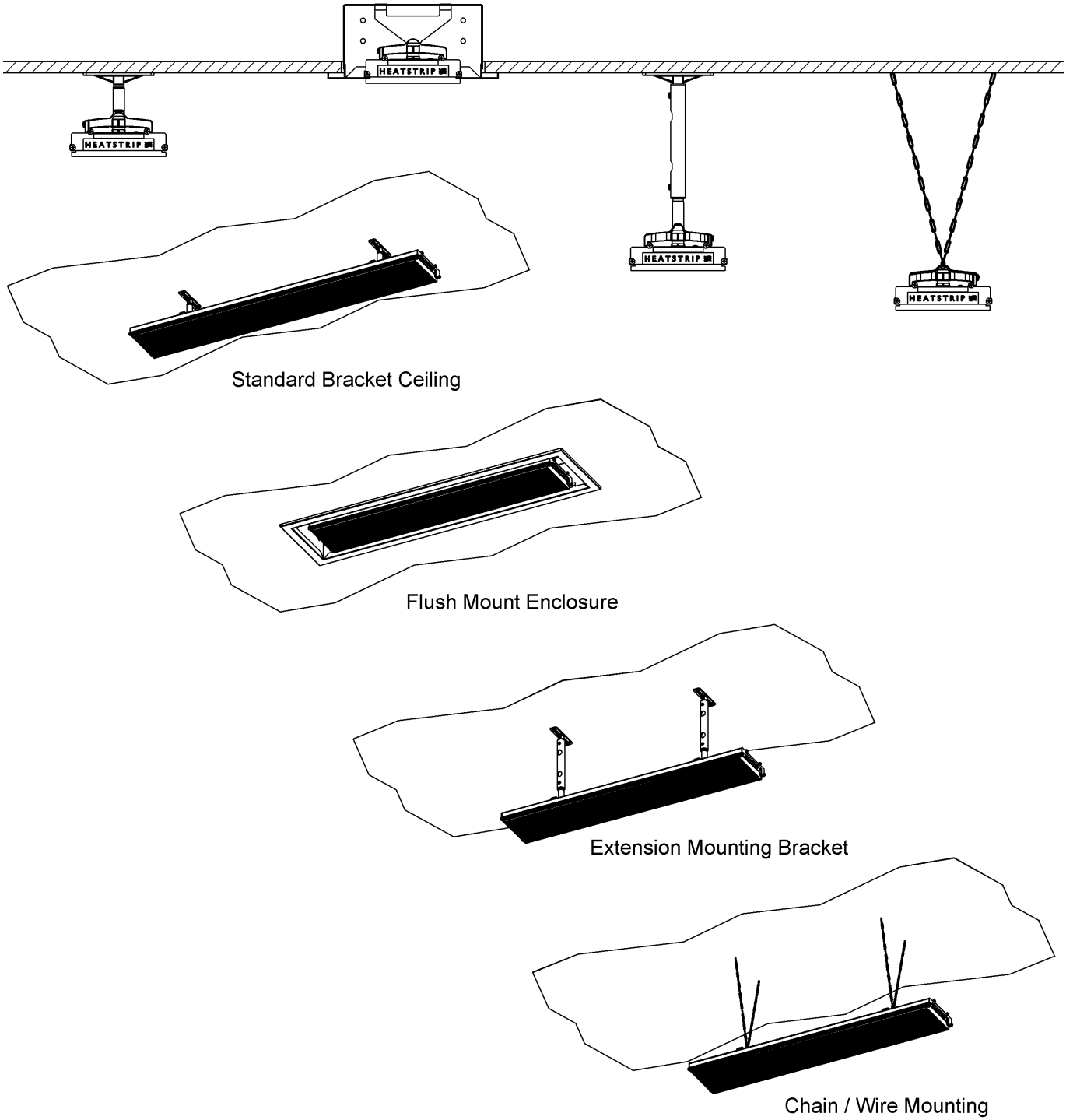

Standard mounting brackets

The HEATSTRIP® Classic comes with a pair of standard mounting brackets. These adjustable brackets allow direct ceiling or wall mount, and come with pre-set angle options of parallel, 22.5° and 45°.

The brackets need to be mounted onto a secure frame or wall with a minimum distance between the two brackets. The minimum distance ("B") for each model is listed in the table below.

When completing the installation, ensure all screws are tight and unit is secure.

There are 4 silicon strips included in the mounting bracket kit. Use these strips to bend around the end of the bracket and slide into the rear casing.

MODEL	"B" MINIMUM DISTANCE (inches)
THH1500US-A	21" (550mm)
THH2400US-A	40" (1030mm)
THH3200US-A	58" (1470mm)
THH2400US-AW240	40" (1030mm)
THH3200US-AW240	58" (1470mm)

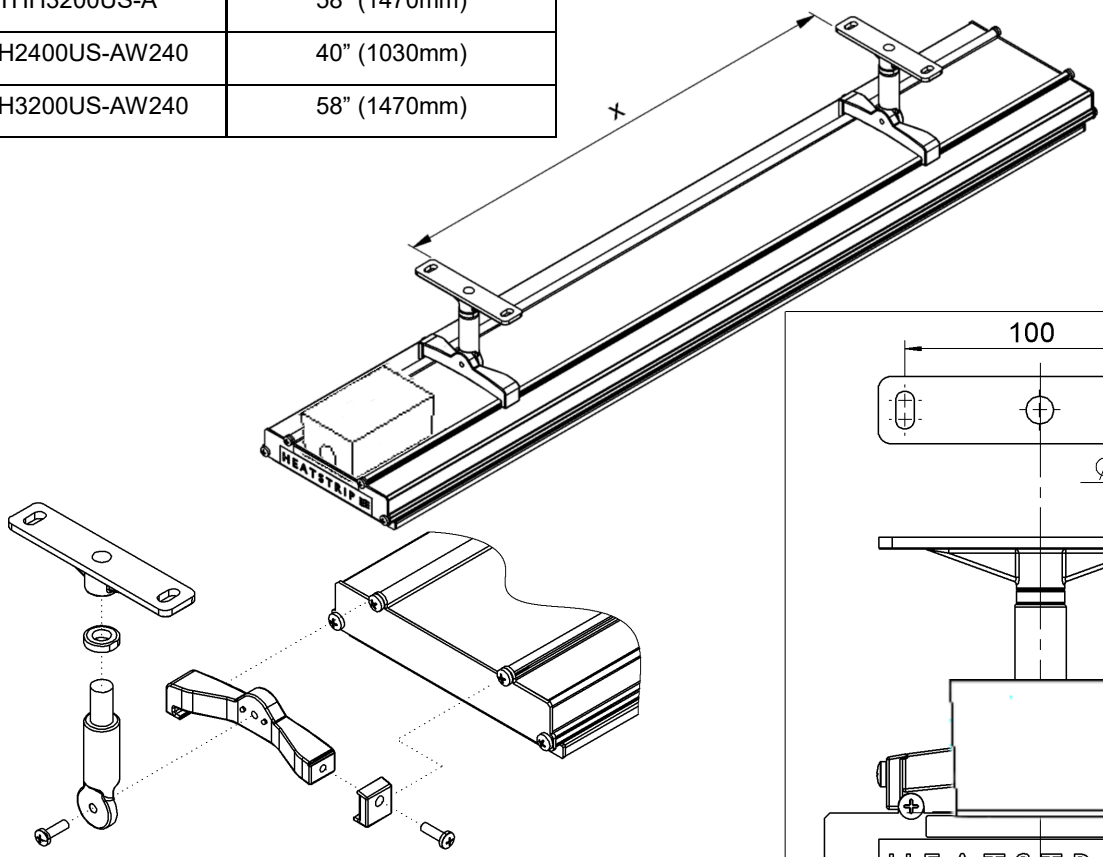

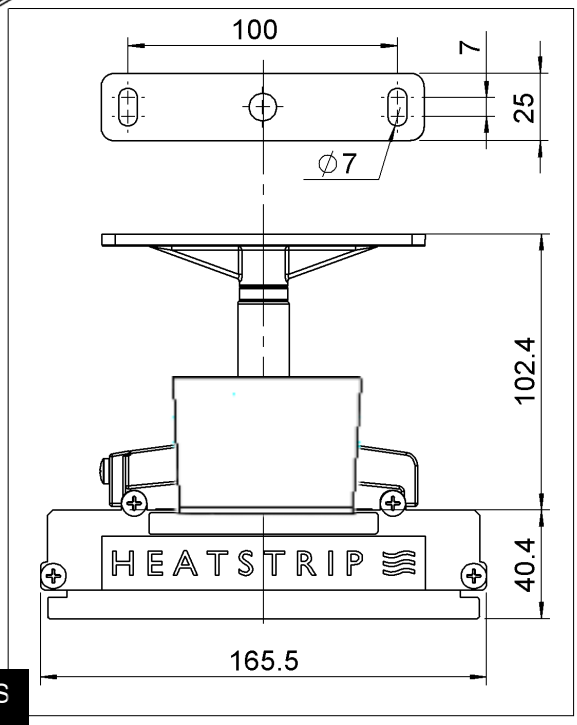

Standard Mounting Bracket

PART No	PACKAGED DIMENSIONS (inches)	WEIGHT (lbs)	MATERIALS
ZBRAK-113S	6" x 6" x 2" (150 x 150 x 50mm)	1 (0.5kg)	316 SS

Flush mount enclosure

The Flush Mount Enclosure is an ideal way to neatly install the HEATSTRIP® into a ceiling. They are available for all HEATSTRIP® Classic models, and are supplied as a one-piece unit for mounting of heaters. Flush mounting can be used with plaster or wood lined ceiling materials.

An ideal mounting height is 90” - 105” (2.5m-2.7m), with a maximum ceiling height of 117” (3.0m) in an outdoor enclosed environment. Maximum mounting heights should be strictly followed, otherwise the performance of the units may be reduced.

The facia of the enclosure is manufactured from 316 Stainless Steel and the rear casing is black zinc coated steel. Please refer to the Installation Manual for more detailed installation information.

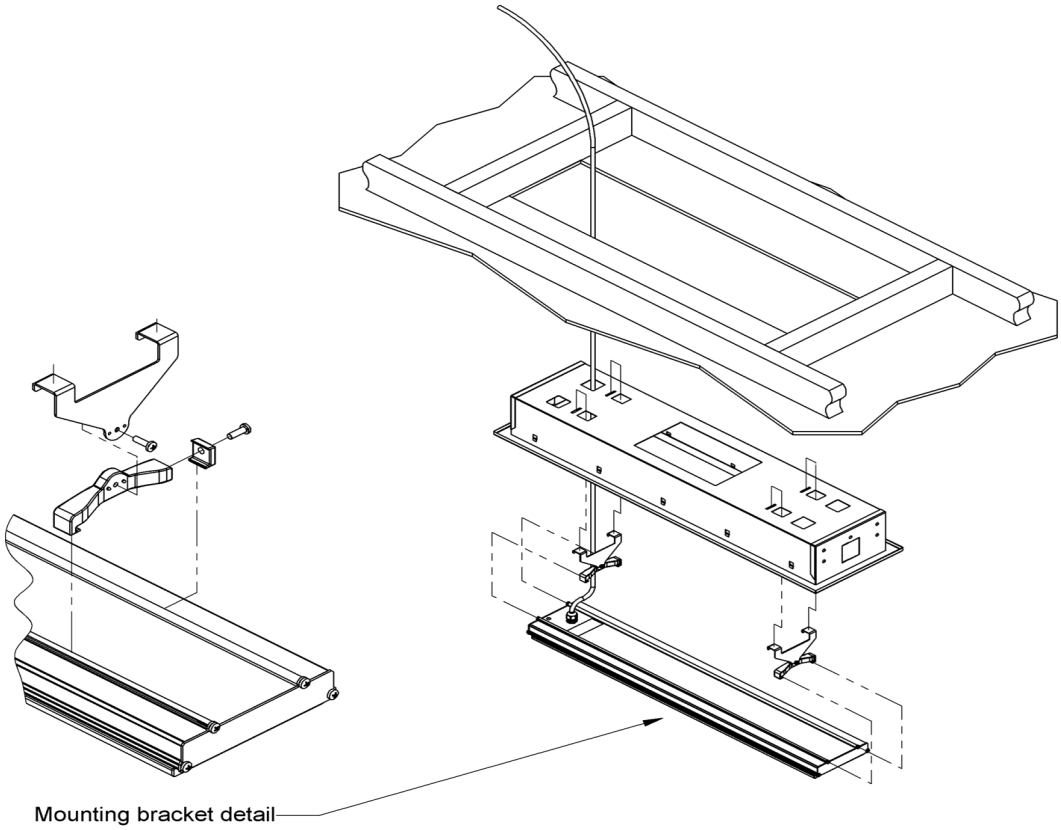

SUITABLE FOR MODELS	PART No	HOLE CUTOUT DIMENSIONS (inches)	OVERALL DIMENSIONS (inches)	WEIGHT (lbs)
THH1500US-A	THHAC-009	38.5” x 9” (980 x 230mm)	40.3” x 11” x 4.9” 1030 x 280 x 125	12 (5.5kg)
THH2400US-A	THHAC-011	55.5” x 9” (1420 x 230mm)	57.5” x 11” x 4.9” (1470 x 280 x 125mm)	18 (8kg)
THH3200US-A	THHAC-012	17.5” x 9” (1830 x 230mm)	73.6” x 11” x 4.9” (1880 x 280 x 125mm)	22 (10kg)

Suspension mount bracket

The Suspension Mount bracket provides a cheap, easy and effective option for lowering the HEATSTRIP® Classic from high ceilings. If the ceiling height is more than 118” (3.0m) is an enclosed outdoor environment, or 105” (2.7m) in an exposed site, it is recommended to lower the heaters to an ideal mounting height of 90” to 105” (2.3 m to 2.7 m).

The bracket is designed to be used with chains or wires.
There can be multiple chain/wire arrangement options, as per the below diagram.

Note: chains or cable are not supplied with the heaters

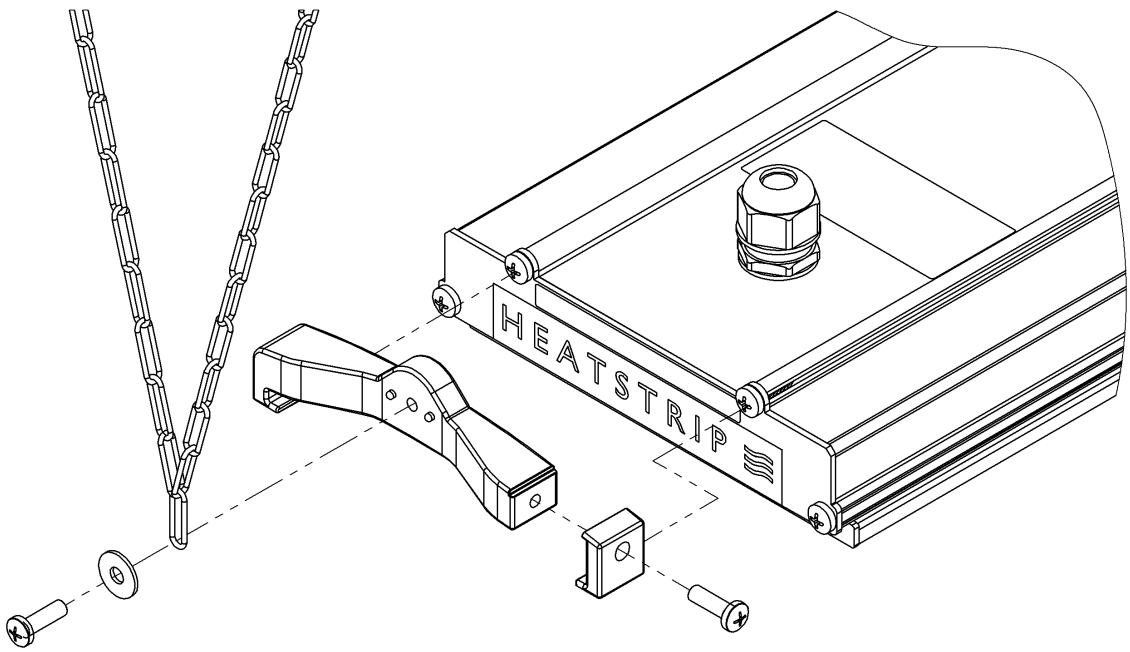

SUITABLE FOR MODELS	PART No	PACKAGED DIMENSIONS (inches)	WEIGHT (lbs)	MATERIALS
THH1500US-A THH1800US-A	ZBRAK-113S	28” x 6” x 2” (700 x 150 x 50mm)	2.2 lbs (1 kg)	ALLOY
THH2400US-A THH3200US-A	ZBRAK-113S	28” x 6” x 2” (700 x 150 x 50mm)	2.2 lbs (1 kg)	ALLOY
THH2400US-AW240 THH3200US-AW240	ZBRAK-113W	28” x 6” x 2” (700 x 150 x 50mm)	2.2 lbs (1 kg)	ALLOY

Extension Mount Bracket (Silver)

The Extension Mount bracket allows HEATSTRIP® Classic units to be lowered from high ceilings, using rigid connections. The brackets are for use with 1” x 1” (25mm x 25mm x 1mm tube) (SHS), and can be supplied as brackets only for customising the length of the drop on site; or supplied as a complete kit with brackets, pre-cut poles and connections. The standard length options as part of the kit are 12” (300mm), 24” (600mm), 36” (900mm) and 48” (1200mm).

The kits include all brackets, poles and screws necessary for connection to the heaters, however it does not include

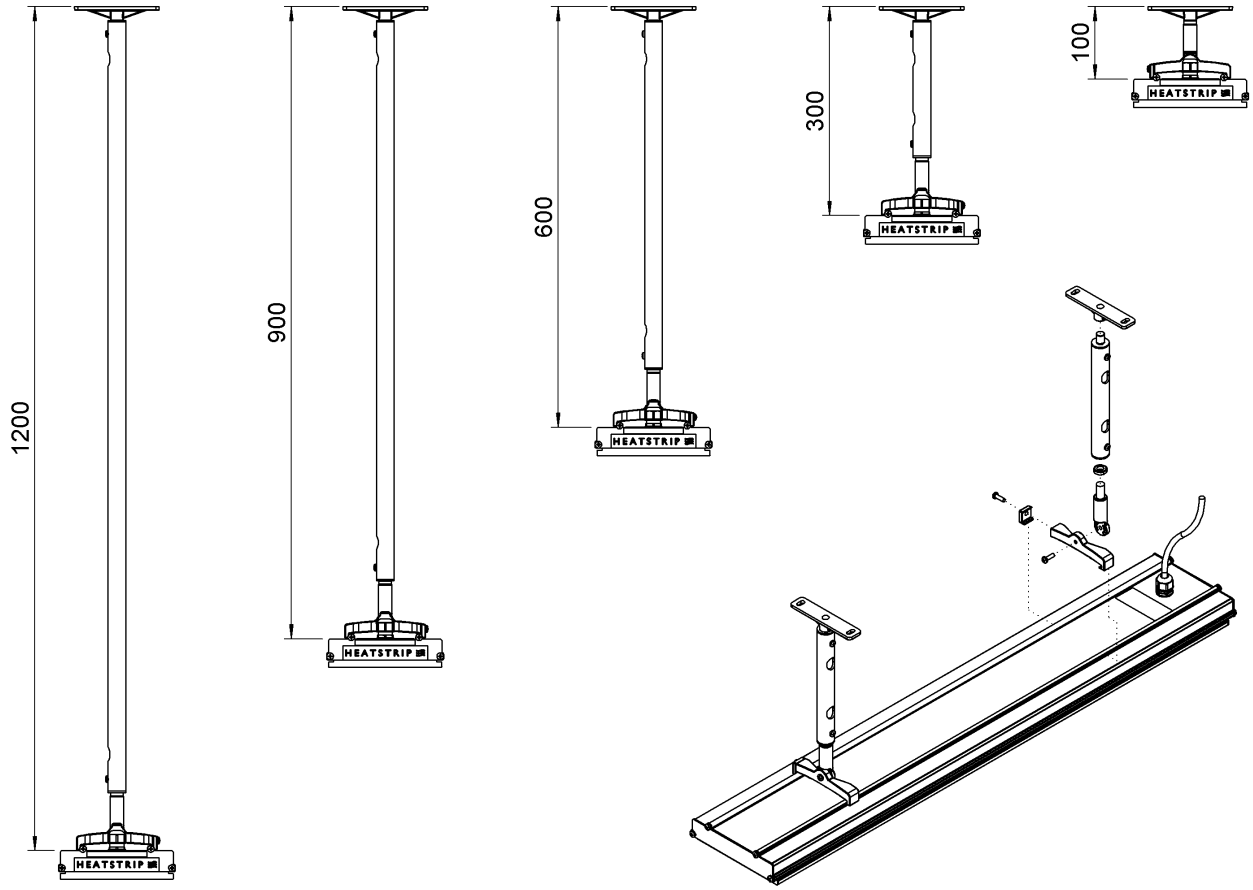

PART No	PACKAGED DIMENSIONS (mm)	WEIGHT (lbs)	MATERIALS	NOTES
THHAC-005	12” x 12” x 2” (300 x 150 x 50mm)	5 lbs (2 kgs)	ALLOY	Kit includes 2 x 12” (300mm) extension pole
THHAC-006	24” x 12” x 2” (600 x 150 x 50mm)	5 lbs (2 kgs)	ALLOY	Kit includes 2 x 24” (600mm) extension pole
THHAC-007	36” x 12” x 2” (900 x 150 x 50mm)	6 lbs (2.5 kgs)	ALLOY	Kit includes 2 x 36” (900mm) extension pole
THHAC-008	48” x 12” x 2” (1200 x 150 x 50mm)	7 lbs (3 kgs)	ALLOY	Kit includes 2 x 48” (1200mm) extension pole

Extension Mount Bracket (White)

The Extension Mount bracket allows HEATSTRIP® Classic units to be lowered from high ceilings, using rigid connections. The brackets are for use with 1” x 1” (25mm x 25mm x 1mm tube) (SHS), and can be supplied as brackets only for customising the length of the drop on site; or supplied as a complete kit with brackets, pre-cut poles and connections. The standard length options as part of the kit are 12” (300mm), 24” (600mm), 36” (900mm) and 48” (1200mm).

The kits include all brackets, poles and screws necessary for connection to the heaters, however it does not include

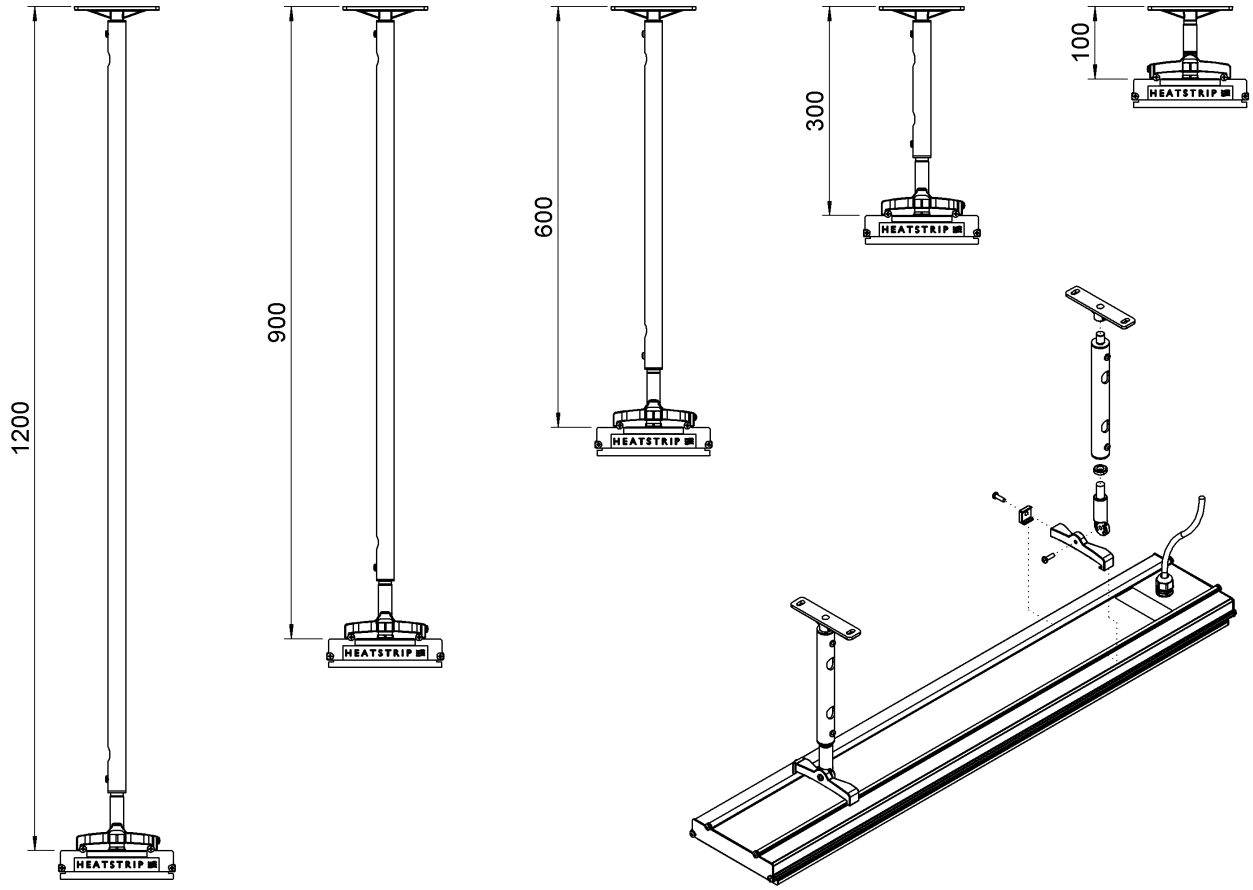

PART No	PACKAGED DIMENSIONS (mm)	WEIGHT (lbs)	MATERIALS	NOTES
THEAC-043	12” x 12” x 2” (300 x 150 x 50mm)	5 lbs (2 kgs)	ALLOY	Kit includes 2 x 12” (300mm) extension pole
THEAC-044	24” x 12” x 2” (600 x 150 x 50mm)	5 lbs (2 kgs)	ALLOY	Kit includes 2 x 24” (600mm) extension pole
THEAC-045	36” x 12” x 2” (900 x 150 x 50mm)	6 lbs (2.5 kgs)	ALLOY	Kit includes 2 x 36” (900mm) extension pole
THEAC-046	48” x 12” x 2” (1200 x 150 x 50mm)	7 lbs (3 kgs)	ALLOY	Kit includes 2 x 48” (1200mm) extension pole

Safety

HEATSTRIP® Classic has an IP rating of 55. This means it is safe for water ingress from all directions. The HEATSTRIP® can be safely hosed down.
HEATSTRIP® has undergone extensive testing both in laboratory conditions; in Thermofilm's manufacturing facility in Melbourne and field trials in Australia and overseas. It has been this testing that gives the purchaser the confidence of a high quality product.

Independent laboratory testing has confirmed Thermofilm's full compliance with Australian and other International Standards. This includes CE, AS/ANZ, UL/CSE.

The heater comes in 1500W, 2400W and 3200W versions. In all events the fixed wiring must be installed by a licensed electrician in accordance with the relevant wiring regulations.

HEATSTRIP® is Class 1 equipment and must be earthed.

In operation, this heater is VERY HOT— do not touch any part of the heater while it is turned on. Do not touch any part until 30 minutes after it is turned off.

This appliance is not intended for use by persons (including children) with reduced physical, sensory or intellectual capabilities, or lack of experience and knowledge, unless they have been given supervision or instruction concerning use of the appliance by a person responsible for their safety. Children should be supervised to ensure they do not play with the appliance.

Do not allow any cables, furnishings, flammable materials or other items come in contact with any surface of the heater.

If installed in wet areas, the heater switches or controls must be located so that they cannot be touched by persons in the bath or shower.

The heater needs to be installed as per the installation instructions paying special attention to the minimum clearances. The heater needs to be mounted on a rigid bracket or fixing.

The heater must not be mounted immediately below or in front of a socket outlet.

In case of a heater fault or damaged supply lead, the appliance should be returned to the point of purchase for return to Thermofilm for repair.

Maintenance

The HEATSTRIP® is made from durable materials, however regular care and maintenance of your heater will help prolong the life of the heater.

It is recommended that you hose down the heater and with a soft cloth gently wipe the surfaces of the heater with a mild detergent to remove the built up contaminants from the environment. Then rinse all detergent off the heater.
All chemicals in the atmosphere including cigarette smoke, pollution etc. will tarnish the surface of the heater. In this case, additional cleaning and maintenance may be required. The cleaning process at least every three months will reduce the amount of build up and keep it looking as best it can. If the heater is in a corrosive environment eg. salt spray, we recommend that you clean your heater with a light spray of fresh water every week. After cleaning, turn the heater on for 20 minutes to dry any water residue and prevent water staining.
Before cleaning or inspection activity, the heater must be switched off and cooled down completely.
Do not use any abrasive materials or products to clean the heater, this includes solvents, citrus based cleaners or other harsh cleaning products.

When handling the heater, ensure that your hands are clean or that you use clean gloves as grease or dirt can mark the surface of the heater.

Do not use high pressure water to clean heaters, light water spray only.

SYMPTOM	REASON	CHECK END USER	CHECK TECHNICIAN	FIX
Freight damage	Damaged during transport	Inspect units for damage	Take photos of packaging and unit and return to factory	Return to factory for repair/ replacement
Missing brackets	Parts missing from box			Contact factory for replacement brackets
Not heating	No power to unit or unit has short circuited	Check that there is power to the unit	Check the resistance across the active and neutral terminals	Return to factory for repair/ replacement
	Cable is damaged	Inspect cable for cuts, scratches, nicks etc.		Return to factory for repair/ replacement
Not hot enough	Not enough power to the unit		Electrician to check there is sufficient voltage and current to the unit	Wire correctly with correct current
	Did not wait for the unit to warm up	Wait 15 minutes for the temperature to reach its maximum		Normal Operation
	Multiple units are connected in series not in parallel and not getting enough power		Check the circuit that each one has been wired separately with the correct voltage and current	Wire correctly with correct current
Take too long to heat up	Insufficient power to the unit		Check the voltage and current to the units	Increase power
Discolouration/face of the unit is browning	Heater is over heating		Check that the power supplied matches the rated power on the compliance plate	Replace heater with correctly rated heater
	Environmental factors			Clean heater according to the Cleaning and Maintenance instructions
	This is normal wear for the heater.			Paint the face of the unit using a 600 degree high temperate engine black paint. Available from automotive stores. We can not send these out as aerosols can not be sent in the post

Warranty Terms & Conditions

The below Warranty Terms and Conditions apply for **International Customers.**

Thermofilm warrants to the original owner that HEATSTRIP® Classic products will be free from defects in materials and workmanship for a period of 12 months from the date of purchase in accordance with the following warranty terms and conditions.

Provision of this warranty is subject to:

- The HEATSTRIP® product must be installed in accordance with the Installation Instructions and relevant electrical standards and codes.
- The HEATSTRIP® product must be maintained and cleaned according to instructions detailed in the Installation Manual.
- There is no warranty expressed or implied with regard to capacity requirements. The selection of the unit or units depends entirely upon the system design and capacities as determined by the purchaser.
- The customer has not repaired, opened or altered the product in any unauthorised manner.
- This warranty excludes damage to the product or components arising from circumstances outside the control of Thermofilm, including, but not limited to, where the product is not used for intended purpose; where the product has been rectified in any way; incorrect installation; incorrect power supply; damaged caused during delivery; misapplication, misuse, abuse, vandalism, lack of maintenance or accident.
- Thermofilm's obligations under this warranty are limited to repair or replacement at Thermofilm's factory of any components of the product which Thermofilm identifies to its satisfaction to be defective.
- Transportation charges involved in return of the product to the Thermofilm factory (or any other location authorised in writing by Thermofilm) is the sole responsibility of the customer.
- All products are inspected and tested before despatch and are at the risk of the purchaser after the shipment from the Thermofilm factory, if not delivered by Thermofilm to destination.
- Discolouration of the surface may occur after a period of time, this does not constitute a warrantable event.
- Twisting and bending of the heaters may occur, this does not constitute a warrantable event.
- No products or components will be supplied in advance of an examination of the faulty product or components by Thermofilm or an authorized representative of Thermofilm.
- Thermofilm does not participate in any site related costs or labour expenses incidental to replacement of parts, repairing, removing, installing, servicing, transportation or handling of parts to complete products, and assumes no liability on parts repaired or replaced without written authorisation. Thermofilm shall not be liable for any default or delay in performance of its warranty obligations caused by any circumstances beyond its control, including, but not limited to, judicial or government restrictions, strikes, fires, floods, abnormal weather conditions, delayed supply of components.

Should products be determined as damaged on arrival, immediately notify the transport company of the condition and have them noted on the freight documents. If damage is discovered after unpacking, demand immediate inspection by the transportation company and insist that a record of the damage is made on the freight documentation.

The customer warrants using the product in accordance with:

- Any instructions provided to it by Thermofilm from time to time.
- All government and local regulations, including but not limited to all relevant electrical, environmental laws and regulations governing the installation, storage, use, handling and maintenance of the goods.
- All necessary and appropriate precautions and safety measures relating to the installation, storage, use, handling and maintenance of goods.

All warranty requests for repairs or replacements must be accompanied by a complete "Warranty Claim Form" available from Thermofilm, together with proof of purchase (and where possible, photos of the installation) and the heater returned to the place of purchase.

In the event of a warranty claim, the goods need to be returned to the distributor/retailer for repair/replacement.